502 VALVE WITH TCR ELECTRICAL ACTUATOR

FEATURES

The brass 2-way ball valve 502+TCR provides the shut-off function for networks of usual non-corrosive fluids: water, air, hydrocarbons, etc. It is a full-bore valve. It is EC- and ACS-approved (French health compliance certificate). The ISO 5211 mounting pad enables the actuator to be directly assembled. The latter is suitable for S4-type service factor, installed indoors or outdoors under shelter.

AVAILABLE MODELS

CW 617N brass body.
1/4'' to 4'' diameters.
G thread connections.
Supply voltages: 12V DC, 24V DC, 24V AC and 230V AC.

LIMITS OF USE

Fluid pressure: PS	16 bar
Fluid temperature: WT	- 10°C / + 100°C
Ambient temperature	- 20°C / + 60°C
Service factor	S4 – 50%

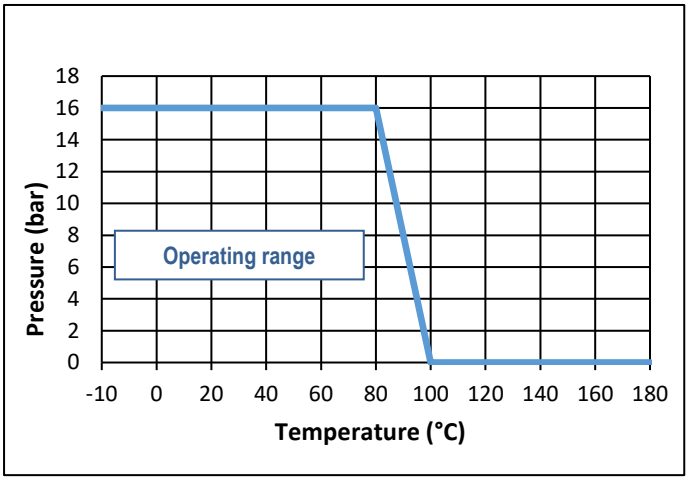

DIRECTIVES AND MANUFACTURING STANDARDS

OBJECT	Standard	ON	OBJECT	Standard
Pressure Equipment Directive 2014/68/EC	**1/4'' to 1'':** not subject		French health compliance certificate (A.C.S.)	**1/4''- 3/8'':** not certified
	1"1/4 to 2": article 4 § 3			**1"1/4 to 1"1/2:** 08 ACC LY 073
	2" 1/2 to 4'': category II	PASCAL 1115		**2" to 4'':** 10 ACC LY 265
Size	EN 12516-4		Connection Motorisation	ISO 5211:
Brass grade	NKS 12240		Final test	NKS 12266

Information given as an indication only, and subject to possible modifications

VANNES EUROPE

502 VALVE WITH TCR ELECTRICAL ACTUATOR

CONSTRUCTION

No.	Name	Material	No.	Name	Material
1	Body	Nickel-plated CW 617N brass	7	Anti-friction ring	PTFE
2	Ball	Chromium-plated CW 617N brass	8	Anti-friction coupling	PTFE
3	O-ring (DN 2''1/2 to 4'')	NBR	9	Stem	CW 614N brass
4	Motorisation flange	Nickel-plated CW 617N brass	10	O-ring	NBR / FPM
5	Nut	CW 614N brass	11	Seat	PTFE
6	Nut	CW 614N brass	12	End	Nickel-plated CW 617N brass

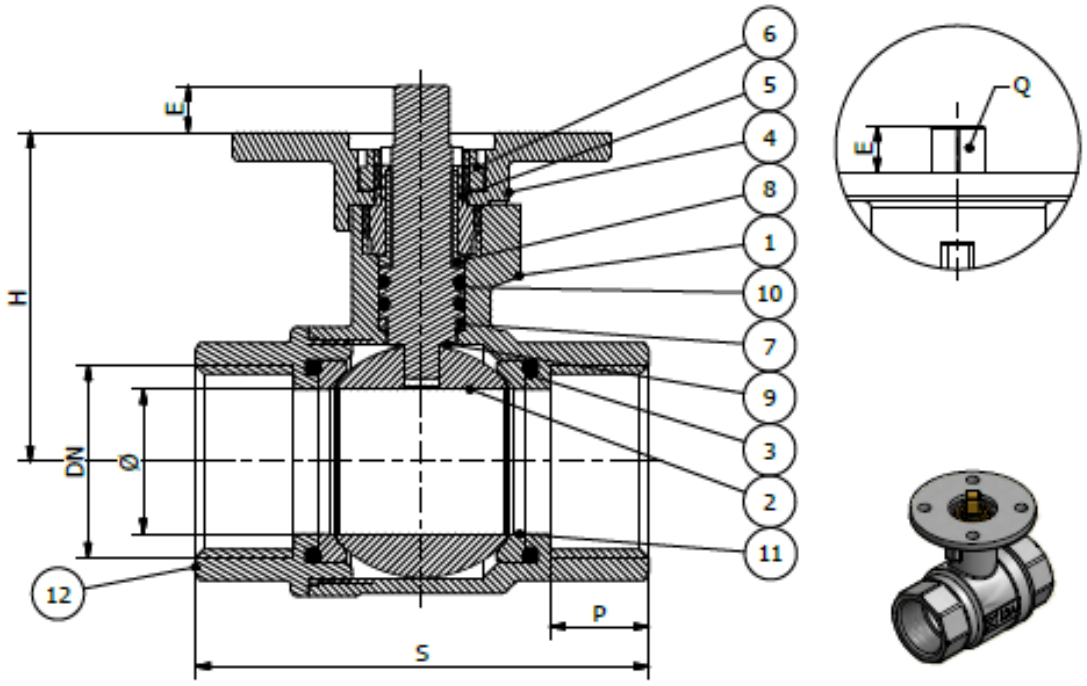

DIMENSIONS (mm)

DN	1/4''	3/8''	1/2''	3/4''	1*	1'' 1/4	1'' 1/2	2''	2'' 1/2	3''	4''
Ø	10	10	15	20	25	32	39	48	64	78	100
S	50	60	63.5	72	86	96	107	115	141	159	196
P	10	11	14	16	17	18	19	21	25	25	30
H	33	34	45	48.5	52.5	56.5	68	79	92	102	127
E	9	9	13	13	13	13	13	10	12	12	17
Q	9	9	11	11	11	11	11	11	14	14	17
ISO	F03	F03	F05	F05	F05	F05	F05	F05	F05	F05	F07

Information given as an indication only, and subject to possible modifications

VANNES EUROPE

502 VALVE WITH TCR ELECTRICAL ACTUATOR

TCR ELECTRICAL MOTORISATION

The TCR motorisation proposed as standard comprises:

- IP67 plastic housing for actuator and steel gear box,

- a safety coefficient of 1.3 minimum compared to the nominal torque of the valve,

- an upstream / downstream pressure difference ΔP=10 bar max.

The actuator's assembly is direct.

DN	Actuator	Power 230V AC / 24V AC-DC	Time 230V AC	Time 24 V ac-dc	Standard equipment of the actuator
1/4"	TCR-02N	15	10s	10s	2 adjustable limit switches 2 dry auxiliary contacts Thermal protection of the motor 2-3W anti-condensation resistance Stand-by manual control with key 3D Position visual indicator Electrical connection: TRC02: 1 x PE M10 + 1.5m cable TCR05: 1 x PE M20 + 1.5m cable TCR11: 2 x PE M14 + 1.5 m cable
3/8"	TCR-02N	15	10s	10s	
1/2"	TCR-02N	15	10s	10s	
3/4"	TCR-02N	15	10s	10s	
1"	TCR-02N	15	10s	10s	
1" 1/4	TCR-05N	25	12s	12s	
1" 1/2	TCR-05N	25	12s	12s	
2"	TCR-05N	25	12s	12s	
2" 1/2	TCR-05N	25	12s	12s	
3"	TCR-11N	100	10s	10s	
4"	TCR-11N	100	10s	10s	

For any other operating conditions, please contact us.
* indicative time for actuator running empty

MOTORISATION OPTIONS

There are many options, so please contact our sales service for more information on these:

1	100mm high height adjustment for installing thermal insulation (500HC valve)
2	Actuator dimensioned for an upstream / downstream pressure difference ΔP greater than 10 bar
3	NF actuator – return via condenser – TCR-KT32
4	High-speed actuator - TRC-NH
5	Smart actuator with manoeuvring time adjustment - TCR-C
6	Control actuator – TCR-T
7	NF control actuator – return via condenser – TCR-T-KT32
8	Field bus actuator - TCR-B
9	Actuator with in-built timer – TCR-D
10	Wireless actuator – TCR-R

Information given as an indication only, and subject to possible modifications

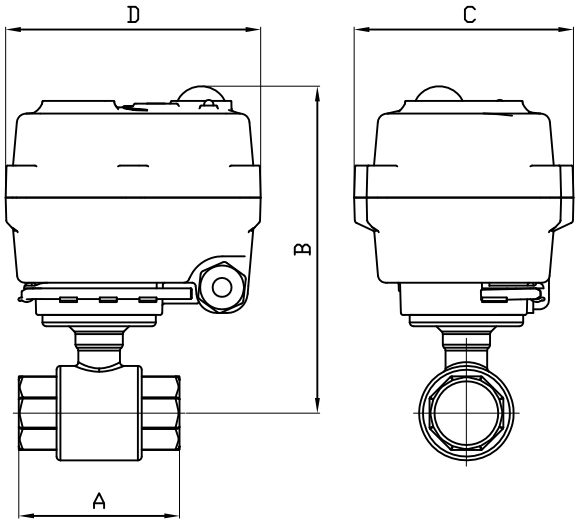

TCR-02-05

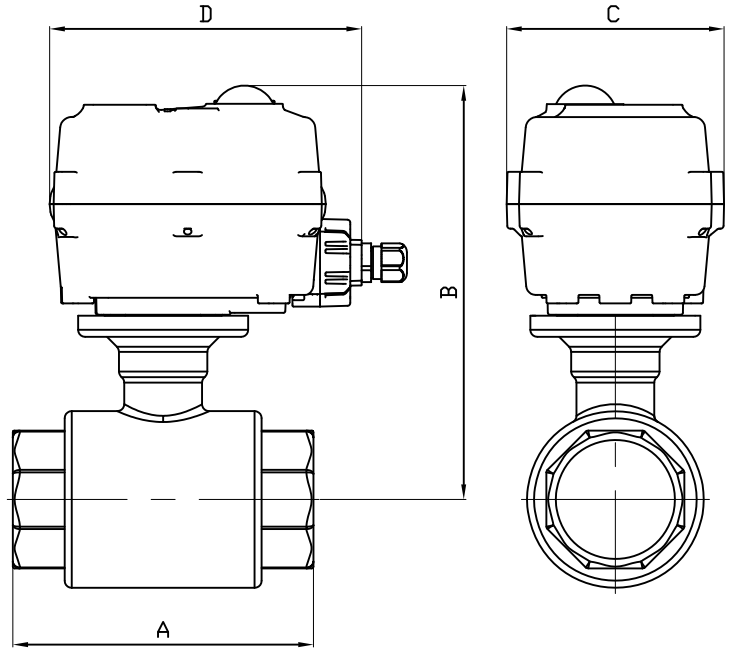

TCR-11

DN	1/4"	3/8"	1/2"	3/4"	1"	1"1/4	1"1/2	2"	2"1/2	3"	4"
SERVO	TCR02		TCR02	TCR02	TCR02	TCR05	TCR05	TCR05	TCR05	TCR11	TCR11
A	50	60	63.5	72	86	96	107	115	141	159	196
B	125	126	166	169.5	173.5	177.5	189	200	213	224	251
C	70		70	70	70	111	111	111	111	115	115
D	104		104	104	104	132	132	132	132	165	165
KG	0.83	0.84	1.12	1.25	1.48	2.86	3.3	4	5.53	8.5	11.16

Informations données à titre indicatif et sous réserve de modifications éventuelles
data subject to alteration

VANNES EUROPE

TCR-N ELECTRICAL ACTUATOR

FEATURES

The TCR-N electric actuators are intended for motorising ¼ turn valves with a torque of 15, 20, 50 or 110 Nm. With a compact construction and plastic housing, they are especially well suited for motorising small size ball valves. Several variants offer advanced functions. IP67 leak-tightness: to be used indoors and, possibly, outdoors under a shelter. Possible installation in parallel. Manual control with a key.

AVAILABLE MODELS

Supply voltages: 230V AC, 24V AC/DC, 12V DC.

LIMITS OF USE

IP Code	IP 67
Ambient temperature	- 20°C / +60°C
Service factor	S4-50%

MECHANICAL FEATURES

Gear box	treated steel pinions
Torques	15 - 20 - 50 - 110 Nm
Angle of rotation	90° +/- 2°
Declutching	without
Override control	By key

IP 67 ISO 9001 CE

Actuator	**TCR 02N**			**TCR 05N**			**TCR 11N**		
Torques (Nm)	15	20	20	50			110		
Voltage	12V DC	24V AC-DC	95-265V AC-DC	12VDC	24V AC-DC	95-265V AC-DC	12V DC	24V AC-DC	95-265V AC-DC
Manoeuvring time (s)	15	10	10	12	12	12	10	10	10
ISO 5211:	F03/F04/F05 - star 11			F05/F07 - star 14			F05/F07 - star 17		

ELECTRICAL FEATURES

Actuator	**TCR 02N**	**TCR 05N**	**TCR 11N**
Motor protection	Thermal switch		
Limit switches	2 adjustable switches		
Auxiliary switches	2 adjustable dry switches		
Anti-condensation	integrated		
Electrical connection	PE M10 + 1.5m cable	PE M20 + 1.5m cable	2 x PE M14

Actuator	**TCR 02N**			**TCR 05N**			**TCR 11N**		
Voltage	12V DC	24V AC-DC	95-265V AC-DC	12V DC	24V AC-DC	95-265V AC-DC	12V DC	24V AC-DC	95-265V AC-DC
Power (W)	15	15	15	25	25	25	100	100	100
Current (A)	1,5	1,5	0,09	1,67		0,18 - 0,37	2,5		0,3 - 0,6
Fuse Protection (A)	5	5	1	8		1 - 2	5		2 - 3

Information given as an indication only, and subject to possible modifications

VANNES EUROPE

TCR-N ELECTRICAL ACTUATOR

CONSTRUCTION (TCR-02N)

TCR-02N					
No.	**Name**	**Material**	**No.**	**Name**	**Material**
1	Casing + lid	Plastic (ABS)	**6**	Rating plate	PVC
2	Position indicator	Polycarbonate plastic	**7**	Key support	Plastic (ABS)
3	Screw x 4	Aisi 304	**8**	Hex key	Steel
4	Backup control stem	Aisi 304	**9**	Packing gland	Nylon
5	Gasket	NBR	**10**	Cover gasket	NBR
Weight (kg): 0.620					

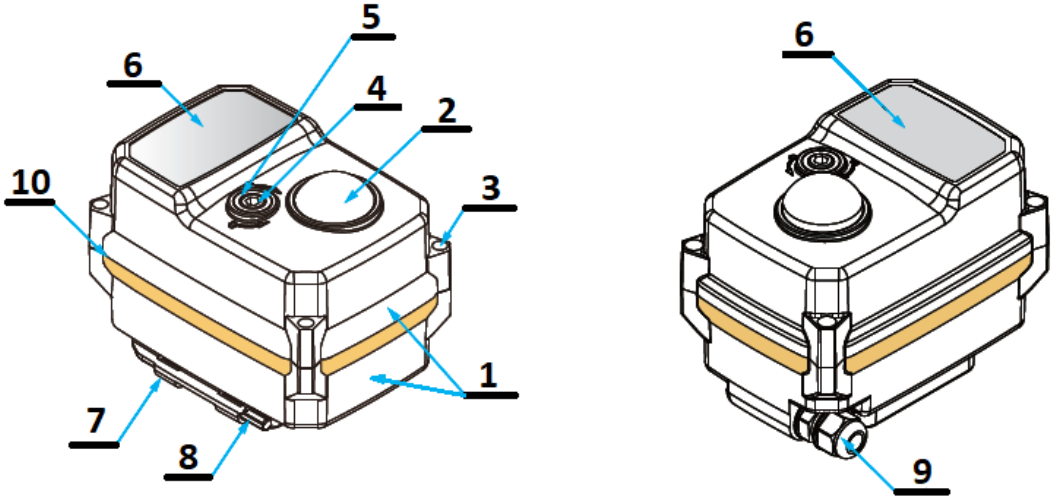

DIMENSIONS (mm)

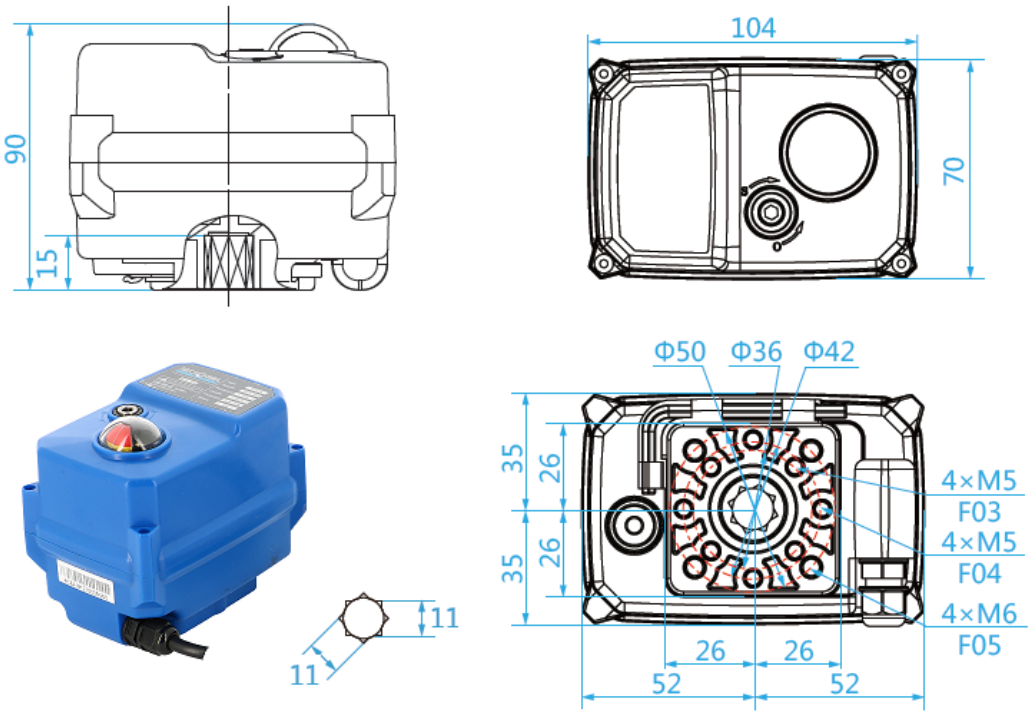

Information given as an indication only, and subject to possible modifications

VANNES EUROPE

TCR-N ELECTRICAL ACTUATOR

CONSTRUCTION (TCR-05N)

TCR-05N					
No.	**Name**	**Material**	**No.**	**Name**	**Material**
1	Casing + lid	Plastic (ABS)	**6**	Rating plate	PVC
2	Position indicator	Polycarbonate plastic	**7**	Key support	Plastic (ABS)
3	Screw x 6	Aisi 304	**8**	Hex key	Steel
4	Backup control stem	Aisi 304	**9**	Packing gland	Nylon
5	Gasket	NBR	**10**	Cover gasket	NBR
Weight (kg): 1.800					

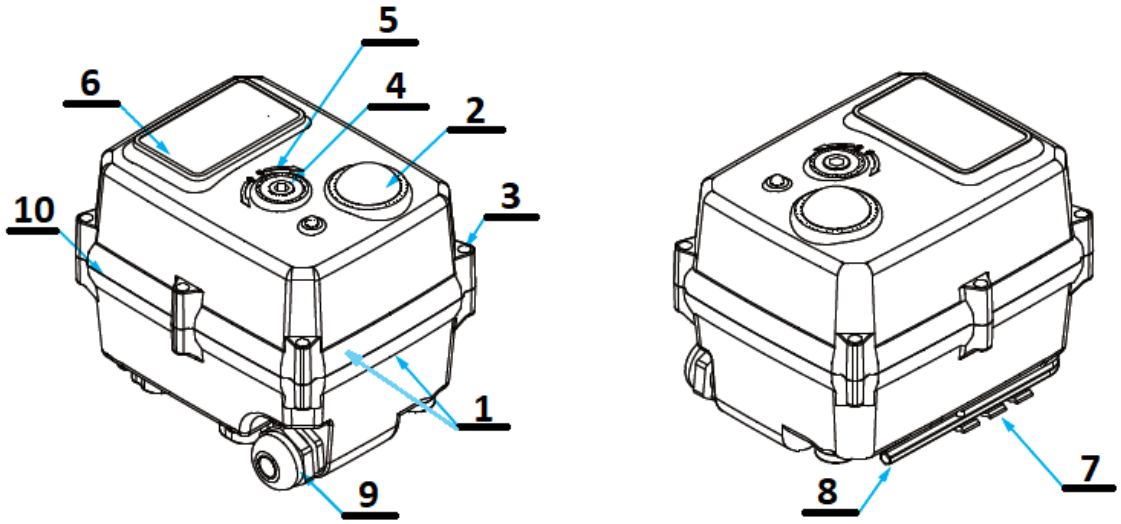

DIMENSIONS (mm)

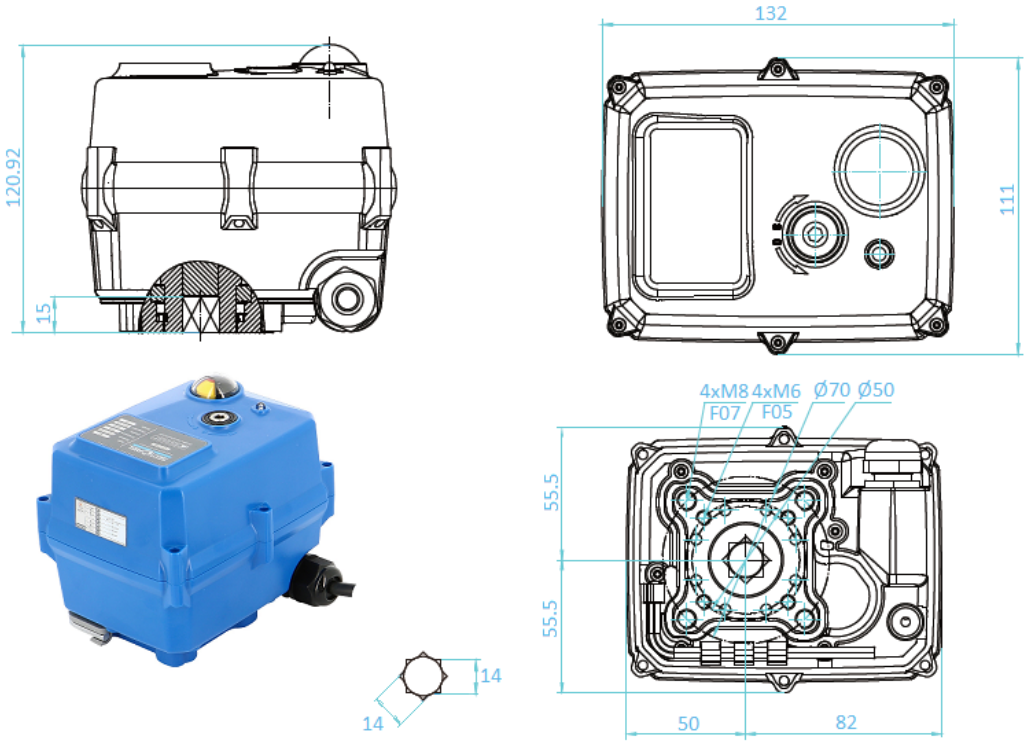

Information given as an indication only, and subject to possible modifications

VANNES EUROPE

TCR-N ELECTRICAL ACTUATOR

CONSTRUCTION (TCR-11N)

TCR-11N					
No.	**Name**	**Material**	**No.**	**Name**	**Material**
1	Casing + lid	Plastic (ABS)	**6**	Rating plate	PVC
2	Position indicator	Polycarbonate plastic	**7**	Key support	Plastic (ABS)
3	Screw x 6	Aisi 304	**8**	Hex key	Steel
4	Backup control stem	Aisi 304	**9**	X 2Packing gland	Nylon
5	Gasket	NBR	**10**	Cover gasket	NBR
Weight (kg): 2.200			**11**	Cable gland unit	Plastic (ABS)

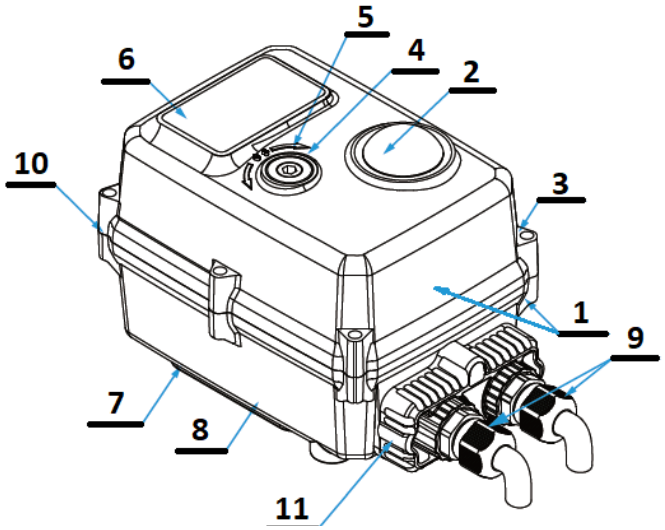

DIMENSIONS (mm)

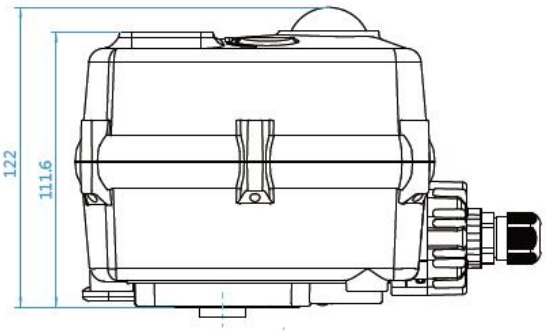

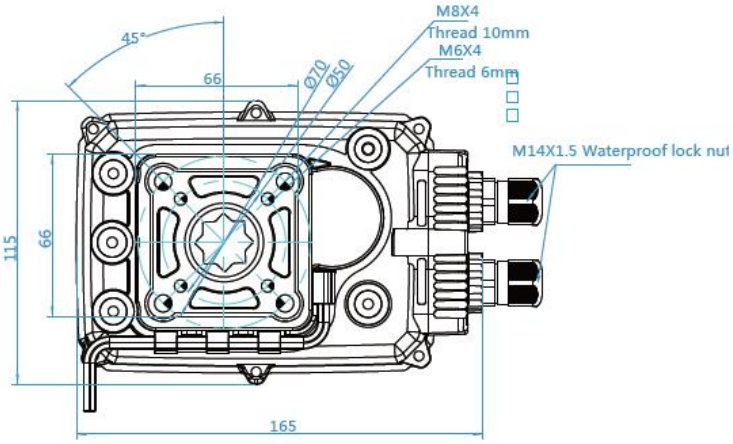

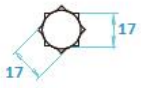

Information given as an indication only, and subject to possible modifications

VANNES EUROPE

TCR-N ELECTRICAL ACTUATOR

WIRING DIAGRAM

BU	Neutral (Blue)
RD	Closing control (Red)
BK	Opening control (Black)
WT	Information return to common (White) Dry switch: 230V AC max 50 mA 230V DC max 500 mA
GY	Opening return information (Grey) Dry switch: 230V AC max 50 mA 230V DC max 500 mA
BR	Closing return information (Brown) Dry switch: 230V AC max 50 mA 230V DC max 500 mA
Y/G	Earth (Yellow / Green)

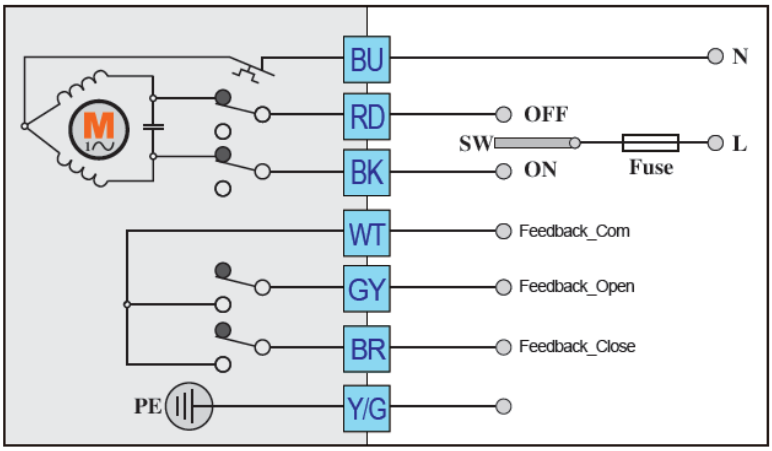

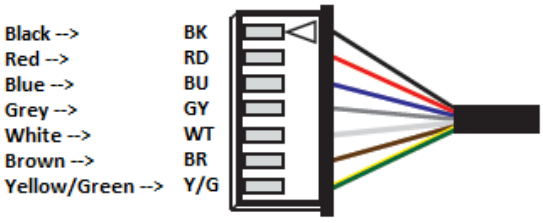

SWITCH SETTING

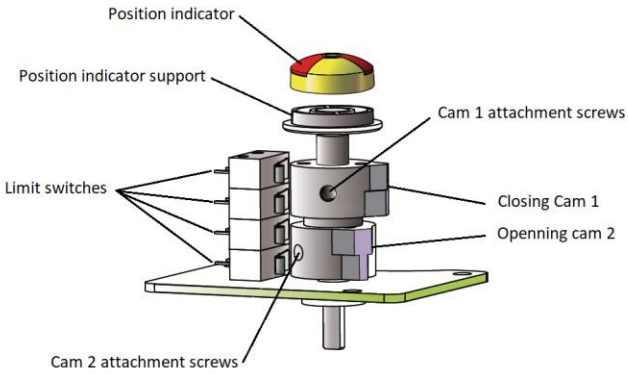

GENERAL VIEW

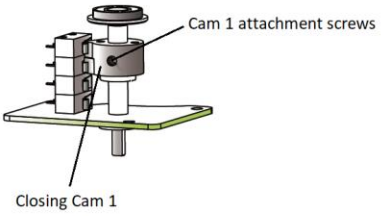

CLOSING CAM ADJUSTMENT

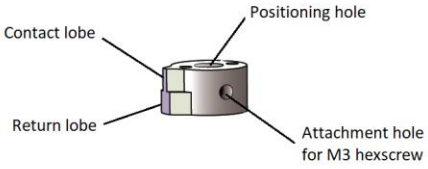

CAM DETAIL

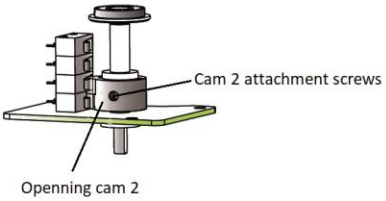

OPENING CAM ADJUSTMENT

Information given as an indication only, and subject to possible modifications

VANNES EUROPE

TROUBLESHOOTING

Defect met	Cause of defect	Method of solving
Inactive actuator	Non-connected electrical grid.	Connect to the electrical grid.
	Wrong voltage.	Check the actuator's voltage.
	Motor overheating.	Check the torque on the valve.
	Faulty connection.	Check the connection to the terminal box.
	Damaged start capacitor.	Contact the supplier for repair.
No switch signal	Faulty connection.	Check the connections.
	Damaged microswitch	Change the microswitch
Valve that is not fully closed	Use the return signal from the actuator check.	Receiving a return signal does not mean that the actuator is fully closed, hence do not cut the power supply.
	The hysteresis increases due to wear or between the actuator and the valve's stem.	Readjust the limit cams. Contact the supplier for repair.
Presence of humidity or water in the actuator	Unsuitable cable cross-section being used.	Contact the supplier for repair.
	The cable connection is not leak-tight.	
	Worn sealing gaskets.	
	Loose cover screws.	Dry the internal parts and tighten the cover screws.

Information given as an indication only, and subject to possible modifications

TCR-N-KT CAPACITOR RETURN ELECTRICAL ACTUATOR

FEATURES

The TCR-N-KT electric actuators are intended for motorising ¼ turn valves with a torque of 15, 45, 95 or 110 Nm. **Capacitor return function**: the closing manoeuvre is provided by a capacitor. With a compact construction and plastic housing, they are especially well suited for motorising small size ball valves. IP67 leak-tightness: to be used indoors and, possibly, outdoors under a shelter. Possible installation in parallel. Manual control with a key.

AVAILABLE MODELS

Supply voltages: 230V AC, 24V AC/DC.

LIMITS OF USE

IP Code	IP 67
Ambient temperature	- 20°C / +60°C
Service factor	S4-50%

MECHANICAL FEATURES

Gear box	treated steel pinions
Torques	15 - 45 - 95 - 110 Nm
Angle of rotation	90° +/- 2°
Declutching	without
Override control	By key

Actuator	**TCR 02N-KT32**		**TCR 05N-KT32**		**TCR 11N-KT32**	
Torques (Nm)	15		45		110	95
Voltage	24V AC - DC	95-265V AC-DC	24V AC - DC	95-265V AC-DC	24V AC - DC	95-265V AC-DC
Manoeuvring time (s)	15	15	12	12	10	10
ISO 5211:	F03/F04/F05 - star 11		F05/F07 - star 14		F05/F07 - star 17	

ELECTRICAL FEATURES

Actuator	**TCR 02N-KT32**	**TCR 05N-KT32**	**TCR 11N-KT32**
Motor protection	Thermal switch		
Limit switches	2 adjustable switches		
Auxiliary switches	2 adjustable dry switches		
Anti-condensation	integrated		
Electrical connection	PE M10 + 1.5m cable	PE M20 + 1.5m cable	2 x PE M14

Actuator	**TCR 02N-KT32**		**TCR 05N-KT32**		**TCR 11N-KT32**	
Voltage	24V AC - DC	95-265V AC-DC	24V AC - DC	95-265V AC-DC	24V AC - DC	95-265V AC-DC
Power (W)	36	36	40	40	100	100
Current (A)	1,5	0,09	1,8	1,6	2,5	0,26 - 0,52
Fuse protection (A)	5	1	10	2	5	2

Information given as an indication only, and subject to possible modifications

VANNES EUROPE

TCR-N-KT CAPACITOR RETURN ELECTRICAL ACTUATOR

CONSTRUCTION (TCR-02N-KT32)

TCR-02N-KT32					
No.	**Name**	**Material**	**No.**	**Name**	**Material**
1	Casing + lid	Plastic (ABS)	**6**	Rating plate	PVC
2	Position indicator	Polycarbonate plastic	**7**	Key support	Plastic (ABS)
3	Screw x 4	Aisi 304	**8**	Hex key	Steel
4	Backup control stem	Aisi 304	**9**	Packing gland	Nylon
5	Gasket	NBR	**10**	Cover gasket	NBR
Weight (kg): 0.620					

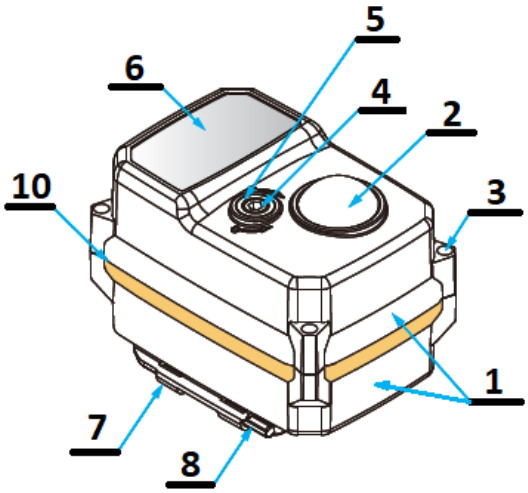

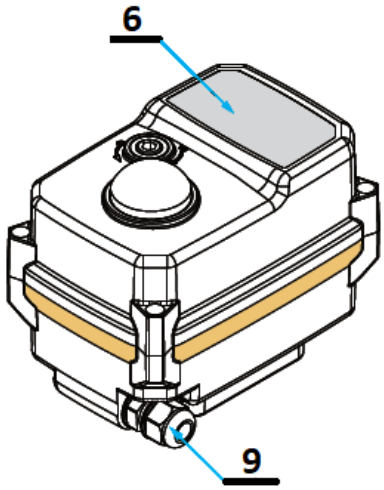

DIMENSIONS (mm)

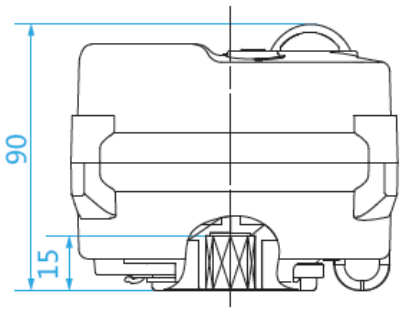

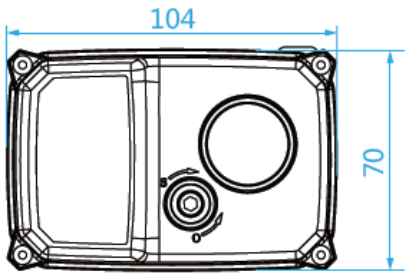

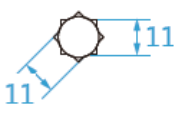

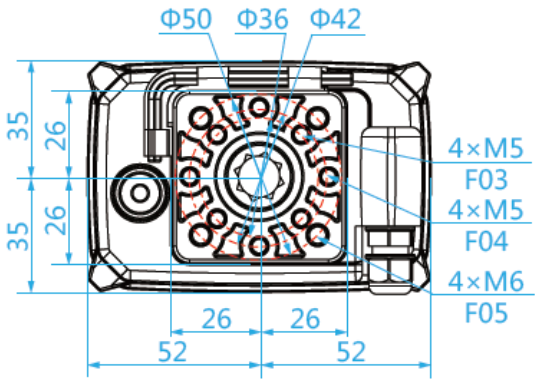

Information given as an indication only, and subject to possible modifications

VANNES EUROPE

TCR-N-KT CAPACITOR RETURN ELECTRICAL ACTUATOR

CONSTRUCTION (TCR-05N-KT32)

TCR-05N-KT32					
No.	**Name**	**Material**	**No.**	**Name**	**Material**
1	Casing + lid	Plastic (ABS)	**6**	Rating plate	PVC
2	Position indicator	Polycarbonate plastic	**7**	Key support	Plastic (ABS)
3	Screw x 6	Aisi 304	**8**	Hex key	Steel
4	Backup control stem	Aisi 304	**9**	Packing gland	Nylon
5	Gasket	NBR	**10**	Cover gasket	NBR
Weight (kg): 1.800					

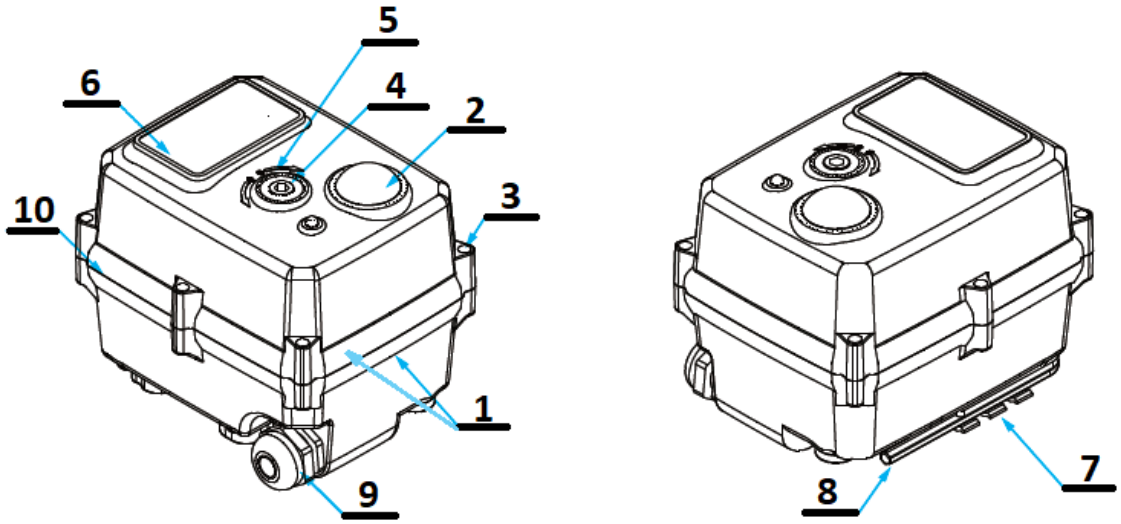

DIMENSIONS (mm)

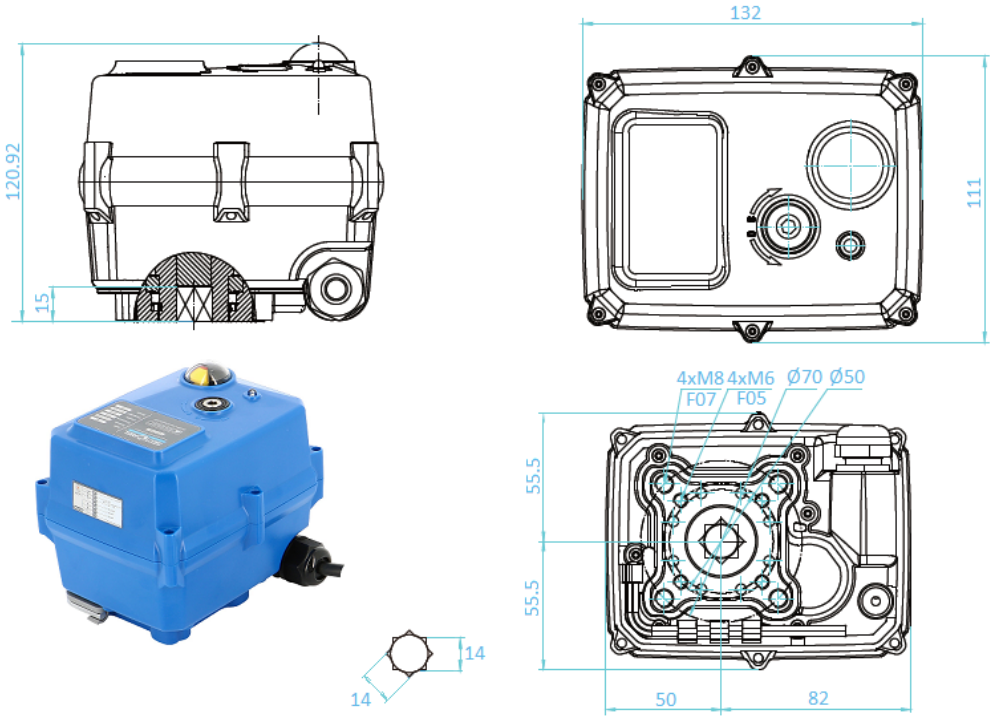

Information given as an indication only, and subject to possible modifications

VANNES EUROPE

TCR-N-KT CAPACITOR RETURN ELECTRICAL ACTUATOR

CONSTRUCTION (TCR-11N-KT32)

TCR-11N-KT32					
No.	**Name**	**Material**	**No.**	**Name**	**Material**
1	Casing + lid	Plastic (ABS)	**6**	Rating plate	PVC
2	Position indicator	Polycarbonate plastic	**7**	Key support	Plastic (ABS)
3	Screw x 6	Aisi 304	**8**	Hex key	Steel
4	Backup control stem	Aisi 304	**9**	X 2Packing gland	Nylon
5	Gasket	NBR	**10**	Cover gasket	NBR
Weight (kg): 2.200			**11**	Cable gland unit	Plastic (ABS)

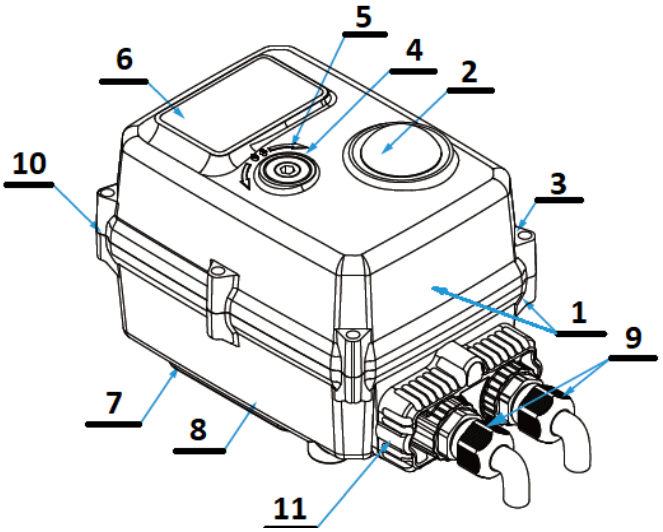

DIMENSIONS (mm)

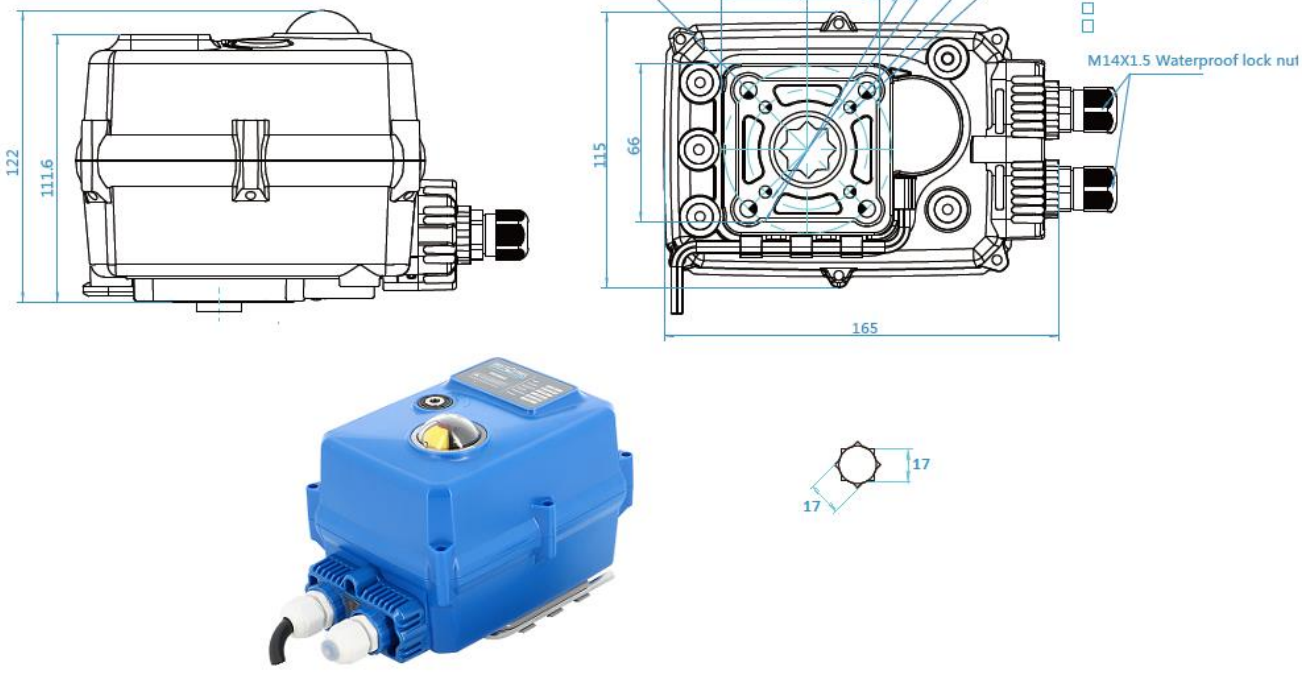

Information given as an indication only, and subject to possible modifications

VANNES EUROPE

TCR-N-KT CAPACITOR RETURN ELECTRICAL ACTUATOR

WIRING DIAGRAM

BU	Neutral / V (blue)
RD	Phase / V+ (Red)
BK	Control (Black)
WT	Information return to common (White) Dry switch: 230V AC max 50 mA 230V DC max 500 mA
GY	Opening return information (Grey) Dry switch: 230V AC max 50 mA 230V DC max 500 mA
BR	Closing return information (Brown) Dry switch: 230V AC max 50 mA 230V DC max 500 mA
Y/G	Earth (Yellow / Green)

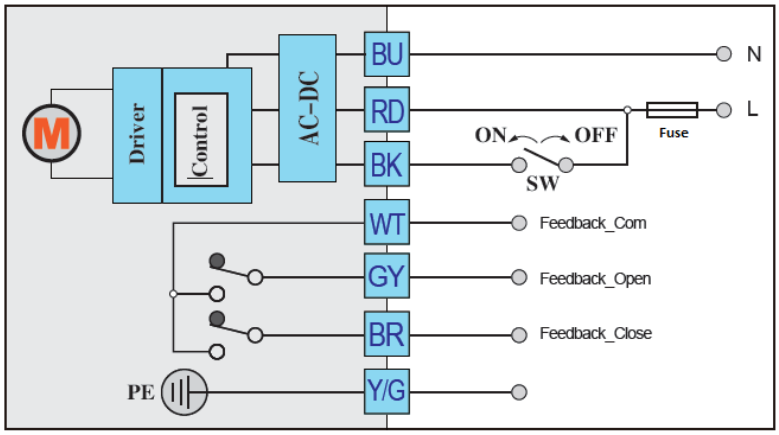

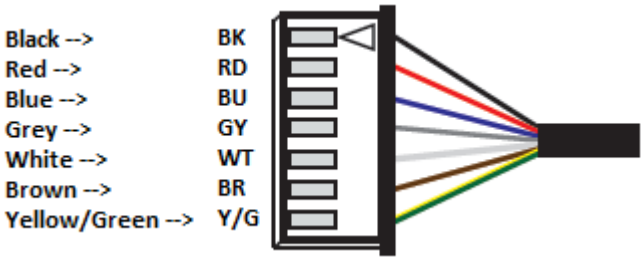

SWITCH SETTING

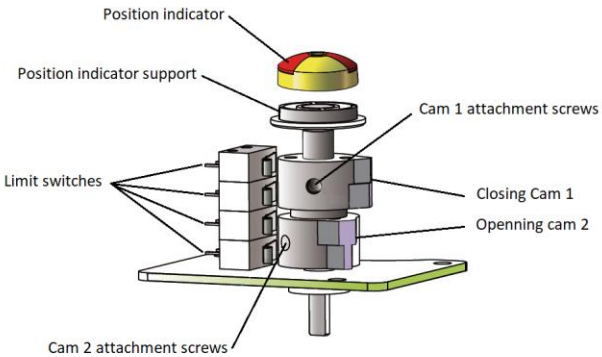

GENERAL VIEW

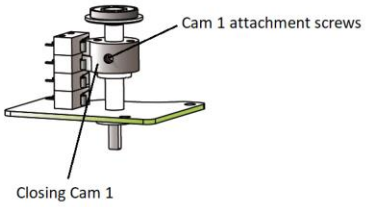

CLOSING CAM ADJUSTMENT

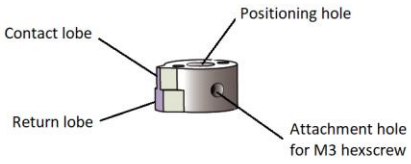

CAM DETAIL

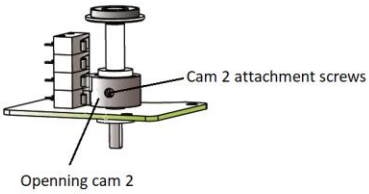

OPENING CAM ADJUSTMENT

Information given as an indication only, and subject to possible modifications

VANNES EUROPE

TROUBLESHOOTING

Defect met	Cause of defect	Method of solving
Inactive actuator	Non-connected electrical grid.	Connect to the electrical grid.
	Wrong voltage.	Check the actuator's voltage.
	Motor overheating.	Check the torque on the valve.
	Faulty connection.	Check the connection to the terminal box.
	Damaged start capacitor.	Contact the supplier for repair.
No switch signal	Faulty connection.	Check the connections.
	Damaged microswitch	Change the microswitch
Valve that is not fully closed	Use the return signal from the actuator check.	Receiving a return signal does not mean that the actuator is fully closed, hence do not cut the power supply.
	The hysteresis increases due to wear or between the actuator and the valve's stem.	Readjust the limit cams. Contact the supplier for repair.
Presence of humidity or water in the actuator	Unsuitable cable cross-section being used.	Contact the supplier for repair.
	The cable connection is not leak-tight.	
	Worn sealing gaskets.	
	Loose cover screws.	Dry the internal parts and tighten the cover screws.

Information given as an indication only, and subject to possible modifications